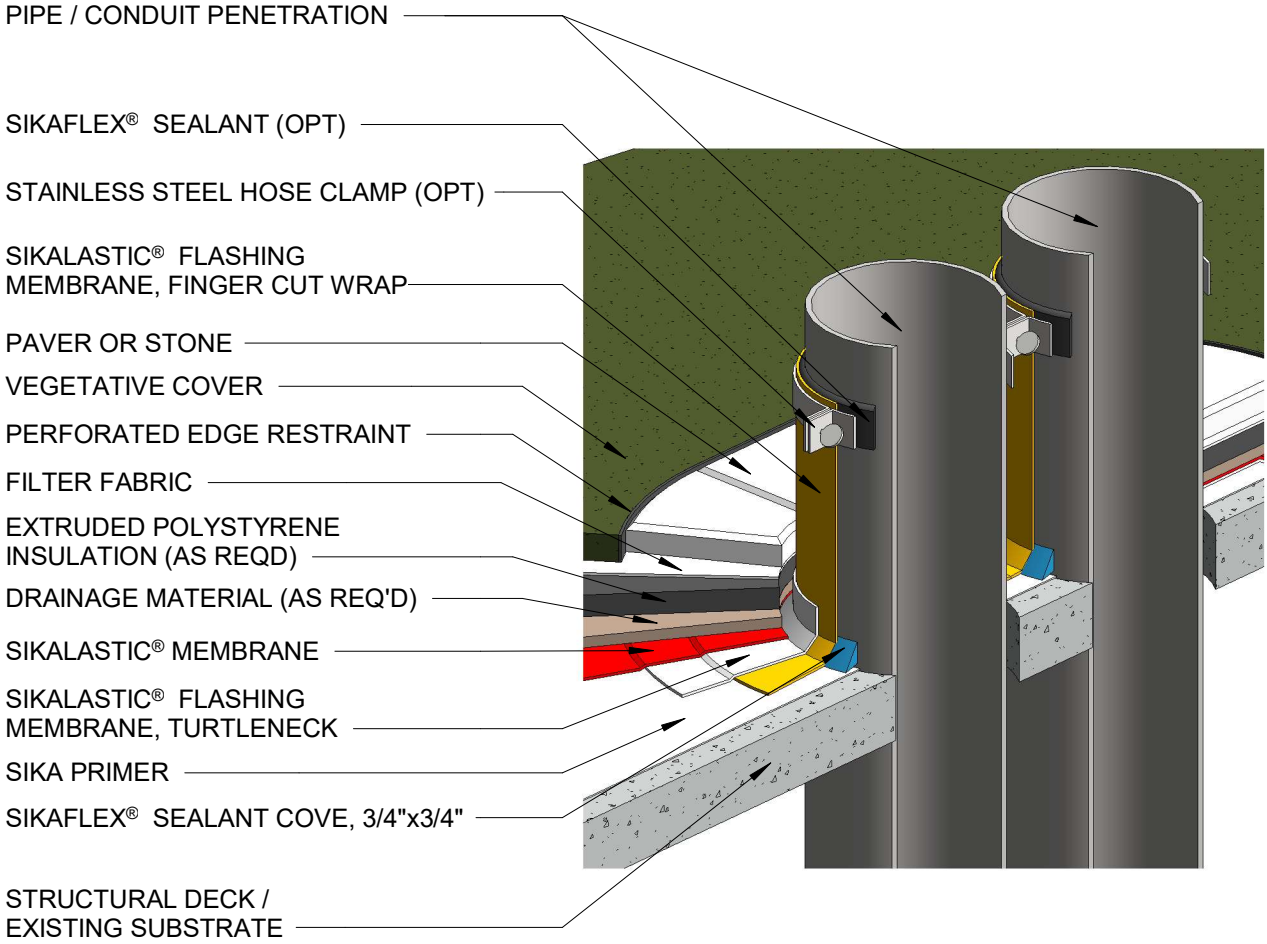

NOTES:

1. PAVER OR STONE 12" WIDE (TYP.) AROUND PENETRATION.

1-800-933-SIKA (7452) www.sikausa.co	JOB NAME:			
	DETAIL TITLE MULTIPLE PIPE PENETRATION			
	SCALE: NT	DATE: 11/13	FILE LAM	DRW. NO.: VG.4.01

AS A MANUFACTURER OF CONSTRUCTION PRODUCTS, SIKA CORPORATION PROVIDES GENERIC DETAILS AS A GENERAL GUIDE FOR INFORMATION PURPOSES ONLY. THESE DETAILS ARE NOT INTENDED TO REPLACE ENGINEERING AND ARCHITECTURAL PRACTICES AND SHOULD NOT BE RELIED UPON FOR THAT PURPOSE. SIKA CORPORATION ASSUMES NO LIABILITY WITH RESPECT TO THE DESIGN OF THE SYSTEM. THE CONSULTANT AND/OR ENGINEER OR DESIGN PROFESSIONAL FOR A PARTICULAR PROJECT BEARS THE SOLE RESPONSIBILITY FOR THE DESIGN OF THE SYSTEM, FOR THE PREPARATION AND APPROVAL OF THE SPECIFICATIONS, DETAILS AND SHOP DRAWINGS, AND FOR DETERMINING THEIR SUITABILITY FOR A PARTICULAR PROJECT OR APPLICATION. WHILE SIKA PROVIDES GENERAL INSTRUCTIONS FOR THE INSTALLATION MATERIALS, THE MEANS AND METHODS USED BY THE CONTRACTOR FOR MATERIAL STORAGE, SUBSTRATE EVALUATION, SURFACE PREPARATION, AND THE INSTALLATION OF BOTH SIKA AND NON-SIKA MATERIALS RESPONSIBILITY OF THE CONTRACTOR. THE CONTRACTOR MUST ALWAYS READ AND FOLLOW THE WARNINGS AND INSTRUCTIONS ON SIKA PRODUCT LABELS, TECHNICAL DATA SHEETS, AND MATERIAL SAFETY DATA AVAILABLE AT **SIKA CORPORATION MAKES NO WARRANTY OF ANY KIND, EITHER EXPRESS OR IMPLIED, AS TO THE CONTENT OF THIS GUIDE DETAIL. SIKA SHALL NOT BE RESPONSIBLE LEGAL THEORY TO ANY THIRD PARTY FOR ANY DIRECT OR CONSEQUENTIAL DAMAGES OF ANY KIND ARISING FROM THE USE OF THIS GUIDE DETAIL. ALL PRODUCTS AND SERVICES PROVIDED BY SIKA SUBJECT TO ITS TERMS AND CONDITIONS OF SALE AVAILABLE AT**